上海艾堤毕丝汽车配件贸易有限公司

www.itbc-ltd.com

E

Side guards 151

Mounting brackets 161

Wheel carrier 161

Wheel chocks 166

Folding steps 168

Door holdbacks 171

Bumpers 177

Buffers - Delta buffers 180

Mudwings and mudguards GREENFLEX 186

Brakes - Prop wheel 188

PRODUCTS FOR CHASSIS

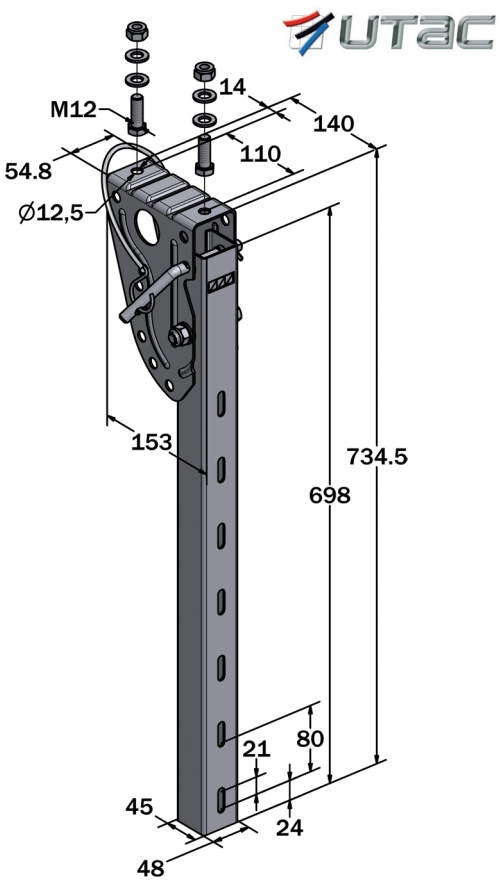

Side guard leg for all profiles

PV UTAC n° 12/01065
Approved with all alu profiles (see 612 XX, 614 XX) and steel profiles (see 613 XX)
Zinc plated steel

Reference	Length (mm)	Weight (kg)	Thickness (mm)
61 030	735	3	2,3

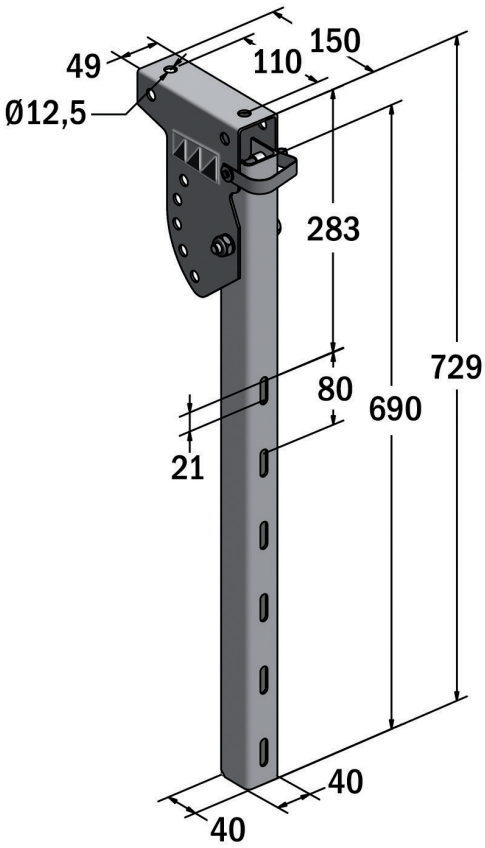

Side guard leg for all profiles

PV UTAC n° 12/01065
Approved with all alu profiles (see 612 XX, 614 XX) and steel profiles (see 613 XX)

Reference	*Material*	height (mm)	Thickness (mm)	Weight (kg)
61 015	*Galvanized steel*	690	2,5	2,6
61 025	*Zinc plated steel*	690	2,5	2,6

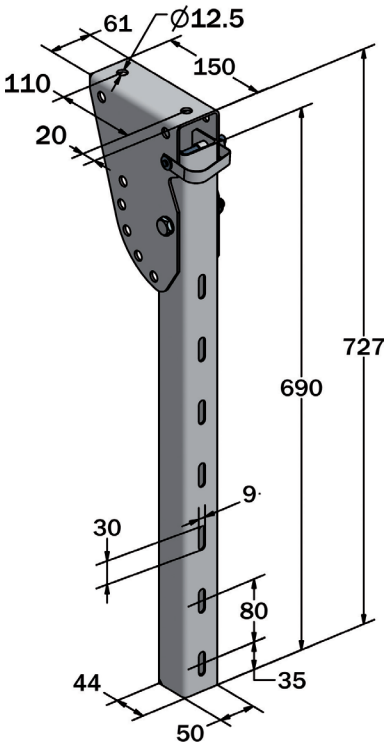

Side guard leg

PV UTAC N°00/01390 for aluminium profile 61230, 61240, 61250, 61270, 61260 and all references with «L». PV TUV N°3128/03 for steel profile 61328, 61329, 61335 et 61350.
Zinc plated steel

Reference	Length (mm)	Weight (kg)
61 110	690	x,x

Stainless steel side guard leg

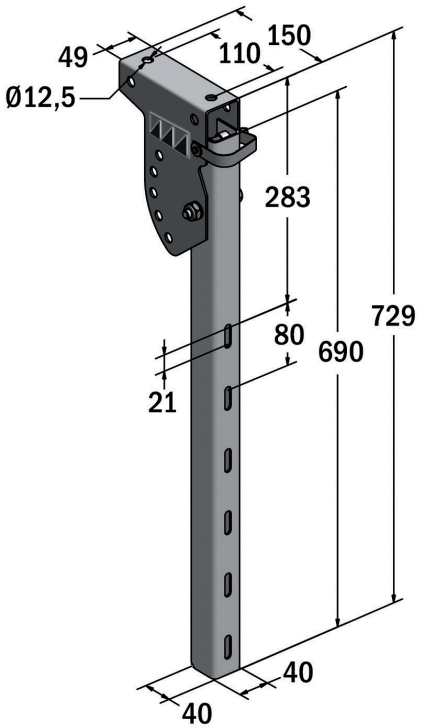

Reference	Thickness (mm)	Weight (kg)	height (mm)
61 120	2	2,2	690

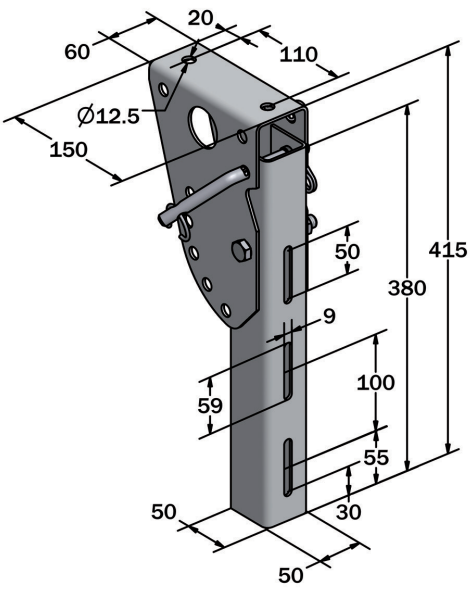

Side guard leg - short

PV UTAC N°00/01390 for aluminium profile 61230, 61240, 61250, 61270, 61260 and all references with «L». PV TUV N°3128/03 for steel profile 61328, 61329, 61335 et 61350.
Zinc plated steel

Reference	Length (mm)	Thickness (mm)	Weight (kg)
765 038	520	3	3,10

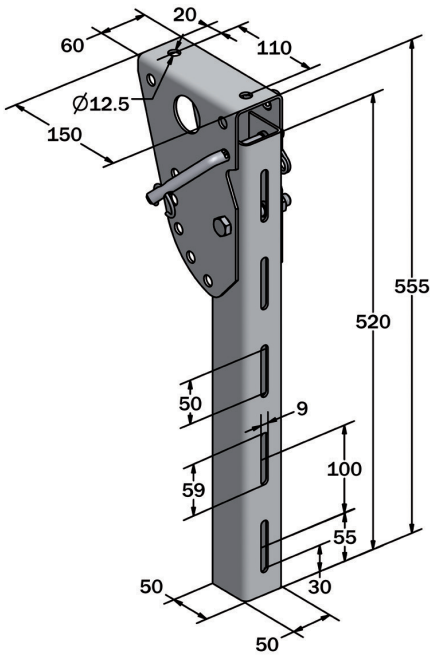

Side guard leg - short

PV UTAC N°00/01390 for aluminium profile 61230, 61240, 61250, 61270, 61260 and all references with «L». PV TUV N°3128/03 for steel profile 61328, 61329, 61335 et 61350.
Zinc plated steel

Reference	Length (mm)	Thickness (mm)	Weight (kg)
765 037	380	3	2,90

Telescopic side guard leg

Specially designed for tippers, tankers, container carriers. Adjustable length : telescopic leg. Adjustable orientation : can be mounted on all frame chassis with varying widths. Hot galvanization antirust treatement. Can be filled to all our side protection profiles in accordance with homologation UTAC PV N°09/00136 :
- Aluminium : ref 61250, 61230, 61240, 61260, 61270, and those ref with L.
- Aluminium : 61410, 61420, 61430, 61440, 61450 and 61470.
- Ganvanied steel : ref 61335, 61328 and 61329.
UTAC PV N°09/00136.
Galvanized steel

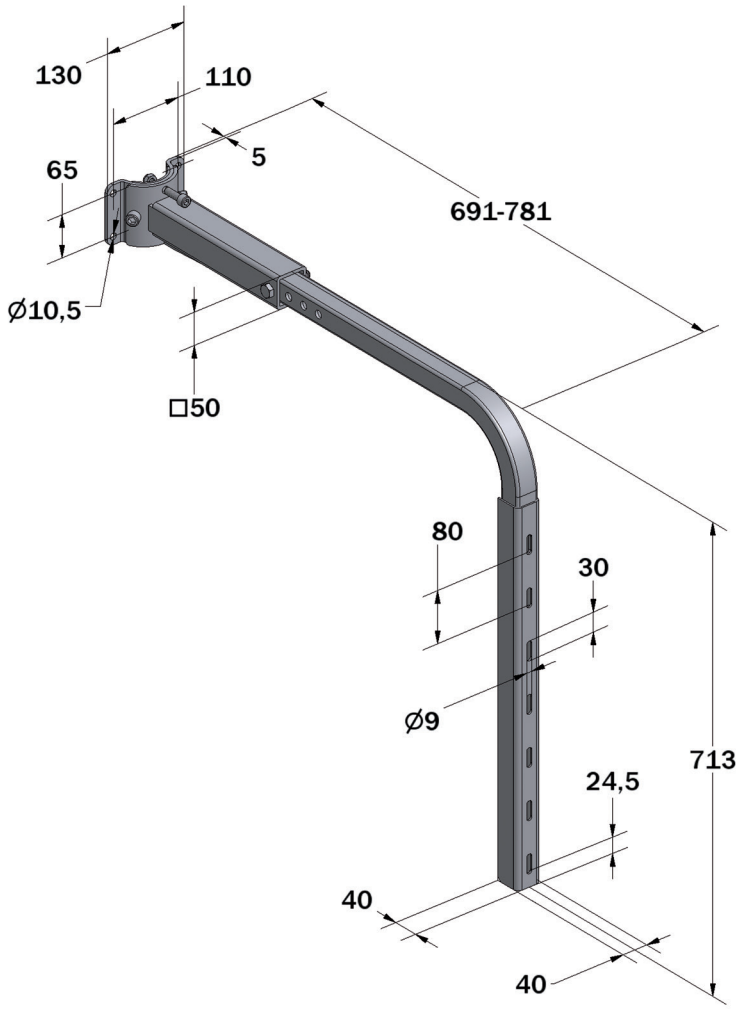

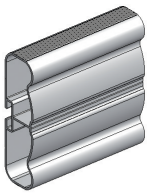
Alu

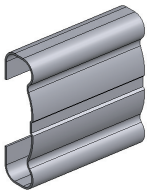
Acier

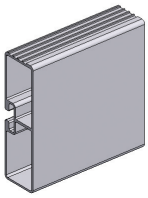
Alu

Reference	Weight (kg)
61 140	7,21

Mounting intruxtions for our steel and aluminium profiles, on the side guard leg ref 61 140

Fixation of the plate on the chassis frame with 4 M10 screws, class 8.8, tightering torque 53 Nm(*)
Or by 2 70 mm long weldings (see detail B : welding fixation details)
Position the leg's rotation angle +/- 10° right or left (if needed) on the plate, using 2 CHC M12 x 30 screws, class 8.8, tightening torque 92 Nm(@)
Fixation with a CHC M10x30 screw, class 8.8, tightening torque 53 Nm, after counter-drilling in position(#).
Adjust the Length of the leg thanks to the M12 x 65 screw + nylstop nut, class 8.8, tightening torque 92 Nm(°). E ventually proceed to a counter-dilling operation in position if needed, first.
Minimum chassis frame height = 120 mm

(*) 4 CHC M10 screws, class 8.8, tightening torque 53 Nm
(@) 2 CHC M12 x 30 screws, class 8.8, tightening torque 92 Nm
(#) 1 CHC M10 x 30 screw + nylstop nut M10, class 8.8, tightening torque 53 Nm
(°) 1 CHC M12 x 65 screw + nylstop nut M12, class 8.8, tightening torque 92 Nm

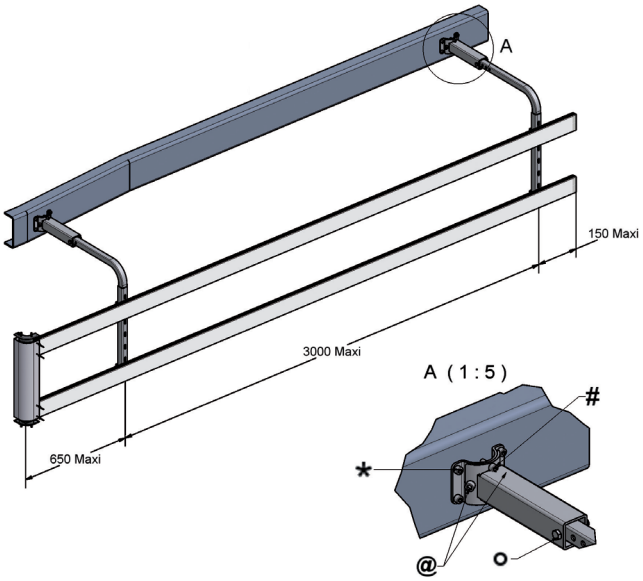

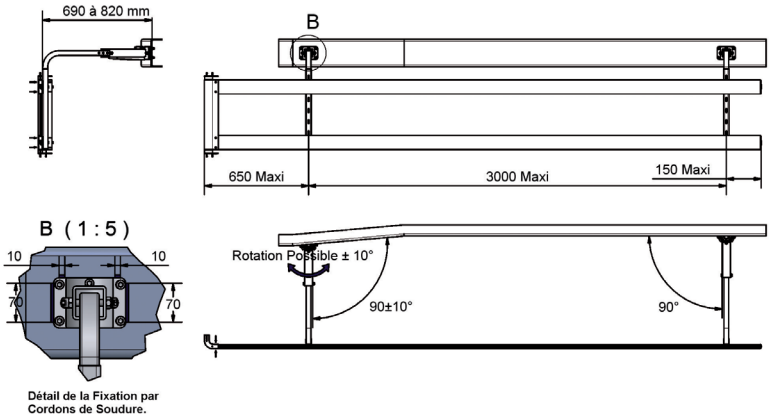

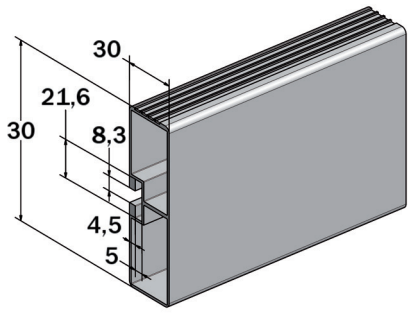

Lateral protection profile

UTAC approved with 765038 - 765037 (PV UTAC 00/01390) - 61015 - 61025 - 61030 (PV UTAC 12/01065) - 61140 (PV UTAC 09/00136)
L type = with lines overlay

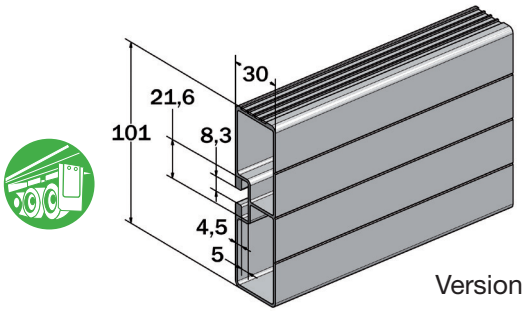

Version L

Reference	Version L	*Material*	Width (mm)	Weight (kg)
61 230	61230L	*Anodized aluminium*	3300	4,50
61 240	61240L	*Anodized aluminium*	5000	6,83
61 250	61250L	*Anodized aluminium*	5600	7,64
61 270	61270L	*Anodized aluminium*	7000	9,56
61 260	61260L	*Mill finish aluminium*	5600	7,64

Single end cap kit for lateral protection

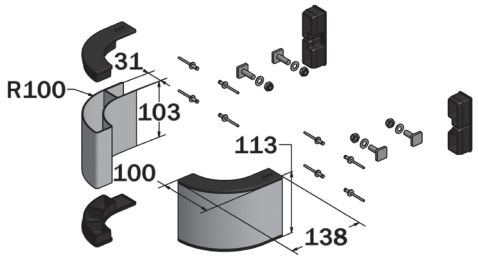

Including : 2 aluminium front protection ends, 4 black plastic caps, 8 aluminium blind rivets 4,8x10, 4 screws M8x25, squared collar + nuts + washers, 2 black plastic rear protection ends.

Reference	height (mm)
61 271	103

Double end cap kit for lateral protection

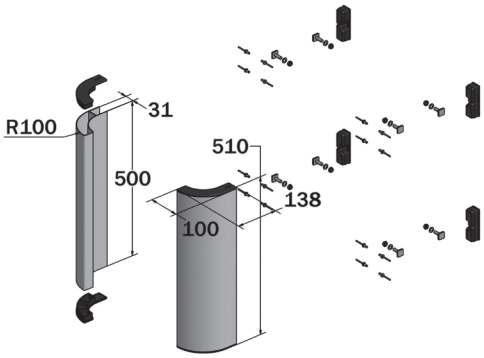

Including : 2 aluminium front protection ends, 4 black plastic caps, 16 aluminium blind rivets 4,8x10, 8 screws M8x25, squared collar + nuts + washers, 4 black plastic rear protection ends.

Reference	height (mm)
61 272	500

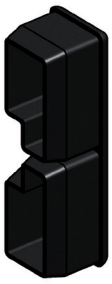

Cap alone

Reference	Matière	*Material*
61 273	Plastique	*Plastic*

06-12

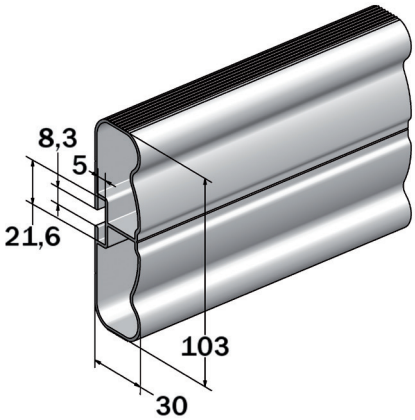

Lateral protection profile

UTAC approved with 61015 - 61025 - 61030 (PV UTAC 12/01065) - 61140 (PV UTAC 09/00136)

Reference	*Material*	Width (mm)	Weight (kg/*m*)
61 420	*Mill finish aluminium*	5600	6,70
61 430	*Anodized aluminium*	3300	3,90
61 440	*Anodized aluminium*	5000	5,92
61 450	*Anodized aluminium*	5600	6,62
61 470	*Anodized aluminium*	7000	8,27
61 410	*Mill finish aluminium*	3500	4,13

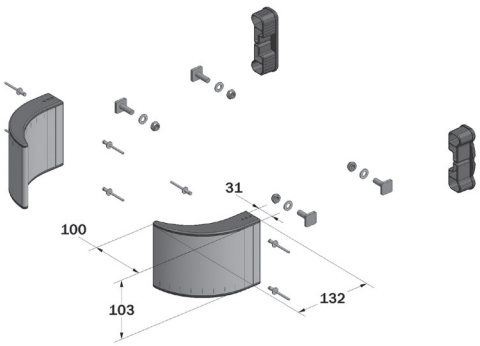

Single end cap kit for lateral protection

Including : 2 aluminium front protection ends, 4 black plastic caps, 8 aluminium blind rivets 4,8x10, 4 screws M8x25 squared collar + nuts + washers, 2 black plastic rear protection ends, 12 sheet metal screws 4,8x13 with zinc plated cheese head

Reference	height (mm)
61 471	100

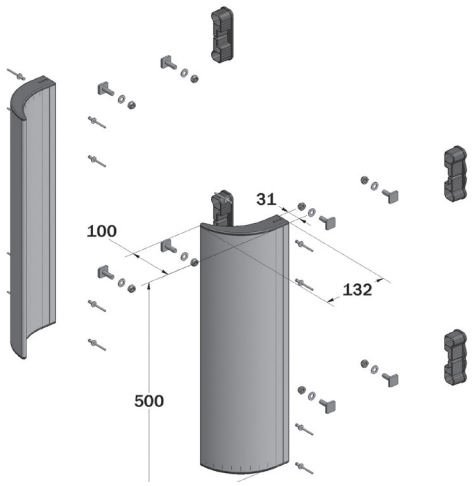

Double end cap kit for lateral protection

Including : 2 aluminium front protection ends, 4 black plastic caps, 16 aluminium blind rivets 4,8x10, 8 screws M8x25 squared collar + nuts + washers, 4 black plastic rear protection ends, 12 sheet metal screws 4,8x13 with zinc plated cheese head

Reference	height (mm)
61 472	500

Cap alone

Plastic

Reference
61 473

06-12

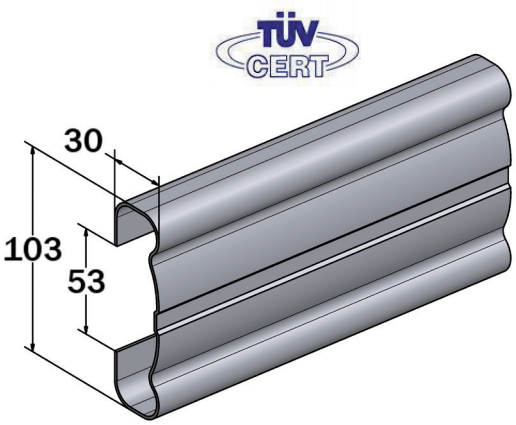

Lateral protection profile

TÜV N°3128/03, 89/297/CEE. UTAC approved with 765038 - 765037 - 61015 - 61025 - 61030 (PV UTAC 12/01065) - 61140 (PV UTAC 09/00136)
Galvanized steel

Reference	Width (mm)	Weight (kg)
61 329	5000	11.57
61 328	4000	9.25
61 335	3300	7.60

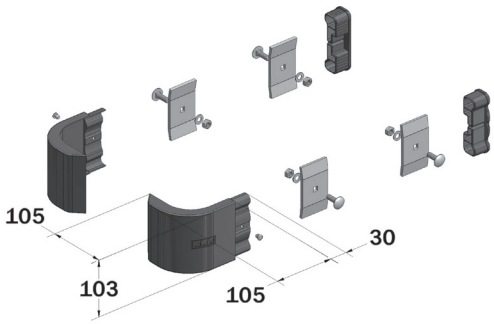

Single end cap kit for lateral protection

Including : 2 galvanized steel front protection ends, 8 fixing plates, 8 screws M8x25, squared collar, + nuts + washers, 8 blind rivets 4,8x10, 8 black plastic rear protection ends, black plastic

Reference	height (mm)
61 331	103

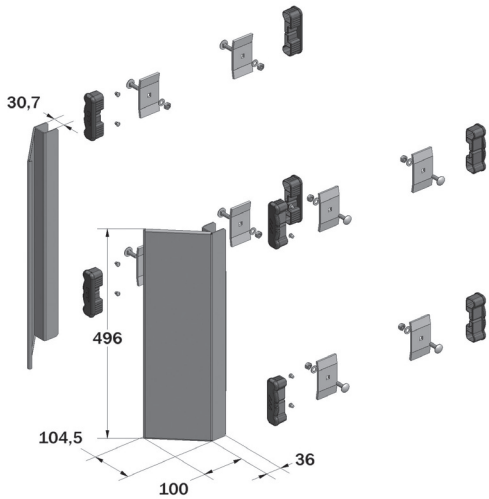

Double end cap kit for lateral protection

Including : 2 aluminium front protection ends, 4 black plastic caps, 16 aluminium blind rivets 4,8x10, 8 screws M8x25 squared collar + nuts + washers, 4 black plastic rear protection ends, 12 sheet metal screws 4,8x13 with zinc plated cheese head

Reference	height (mm)
61 332	496

Fixing plate and fixings

Including: 1 fixing plate, 1 screw M8 x 25, 1 nut M8, 1 washer M8

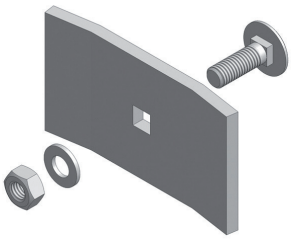

Reference
61 333

Cap alone

Plastic

Reference
61 473

Mounting clamp for chassis thickness 3 to 4 mm and 5 to 6 mm

Zinc plated steel

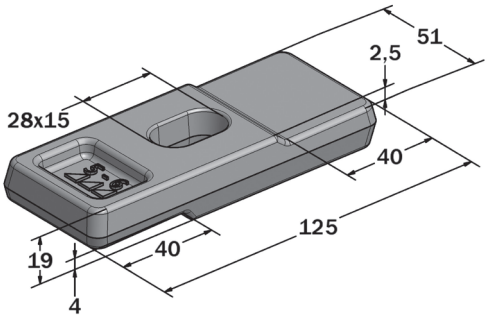

Reference	Weight (kg)
110 890	0,7

Mounting clamp for chassis thickness 7 to 8 mm and 10 to 12 mm

Zinc plated steel

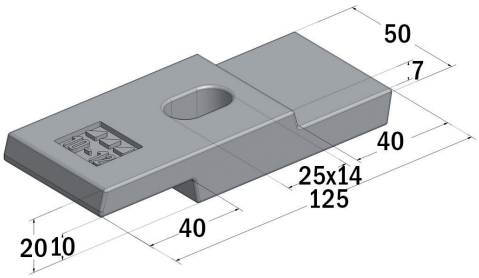

Reference	Weight (kg)
110 910	0,7

Mounting clamp for chassis thickness 10 to 12 mm and 14 to 16 mm

Zinc plated steel

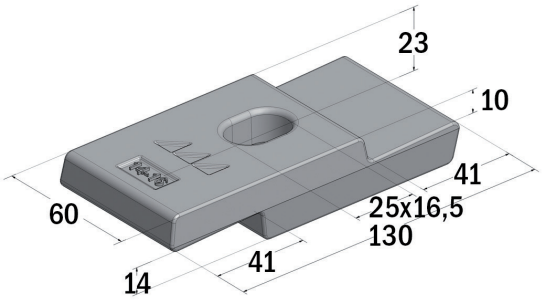

Reference	Weight (kg)
111 000	1

Pivoting body clamp 2 to 28 mm

Zinc plated steel

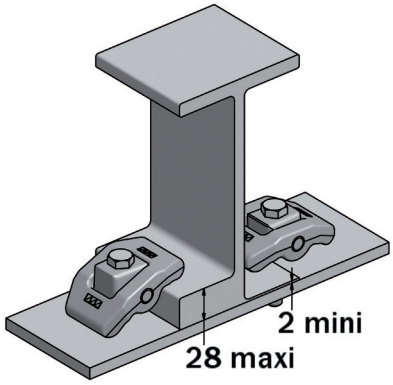

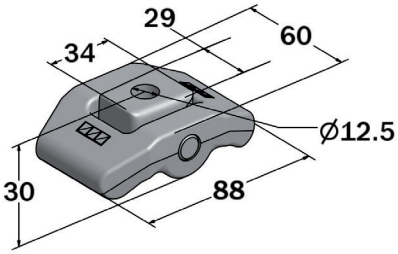

Reference	Dimensions (mm)	Weight (kg)	Max weight (kg)
110 010	88 x 60	0,68	3000

Pivoting body clamp 2 to 17 mm

Zinc plated steel

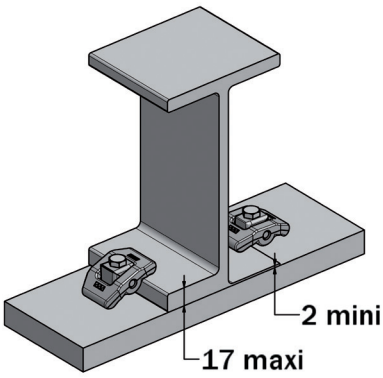

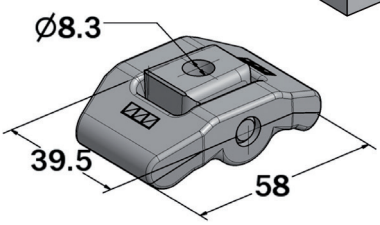

Reference	Dimensions (mm)	Weight (kg)	Max weight (kg)
110 020	39,5 x 58	0,2	1000

Body mounting bracket
Self colour steel

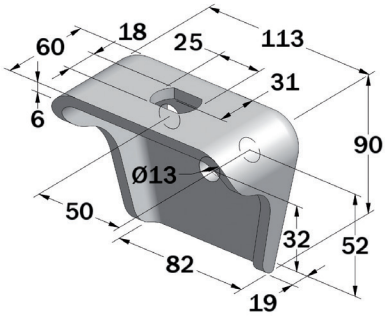

Reference	Thickness (mm)	Weight (kg)
99 001	6	0,76

Body mounting bracket
Self colour steel

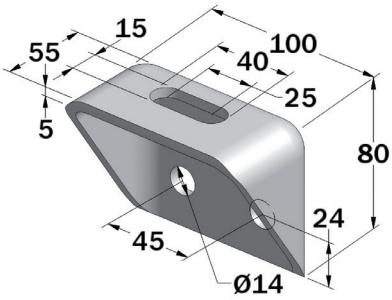

Reference	Thickness (mm)	Weight (kg)
99 002	5	0,55

Body mounting bracket
Self colour steel

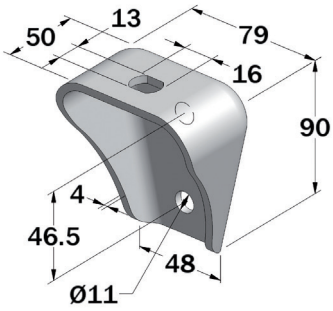

Reference	Thickness (mm)	Weight (kg)
99 003	4	0,38

Body mounting bracket
Self colour steel

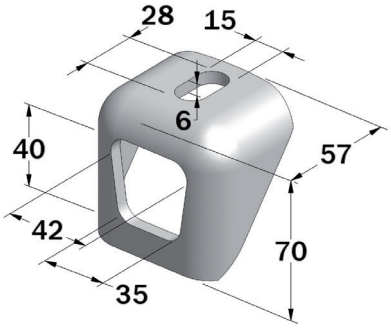

Reference	Thickness (mm)	Weight (kg)
99 004	6	0,35

Body mounting bracket
Self colour steel

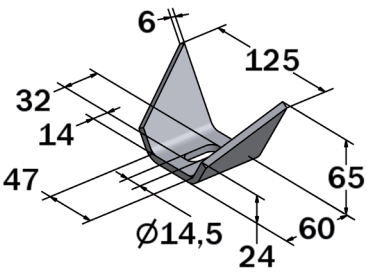

Reference	Thickness (mm)	Weight (kg)
99 005	6	0,3

Body mounting bracket
Self colour steel

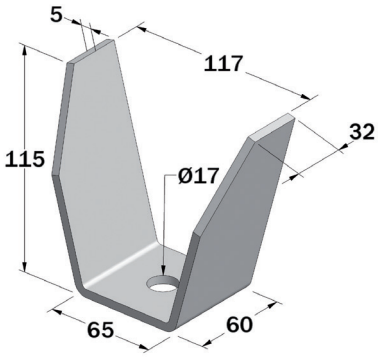

Reference	Thickness (mm)	Weight (kg)
99 006	6	0,7

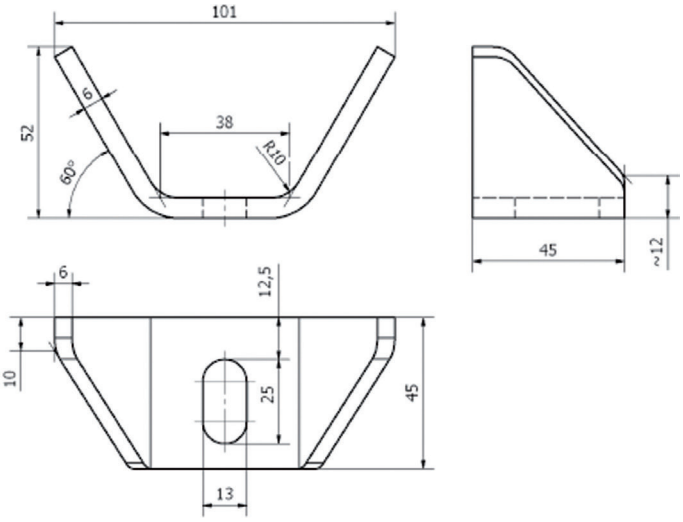

Body mounting bracket

Self colour steel

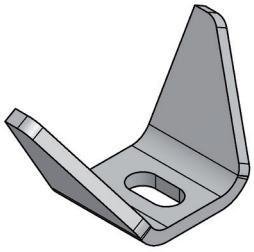

Reference	Weight (kg)
765 022	0,23

Body mounting bracket

Self colour steel

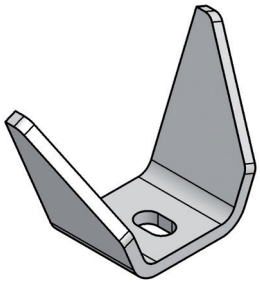

Reference	Weight (kg)
765 023	0,72

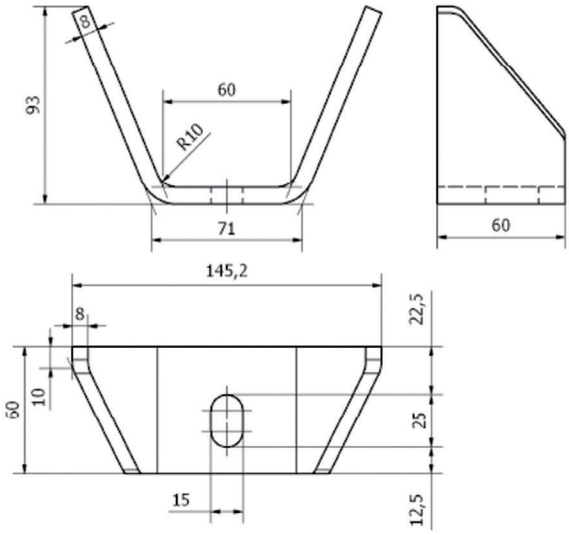

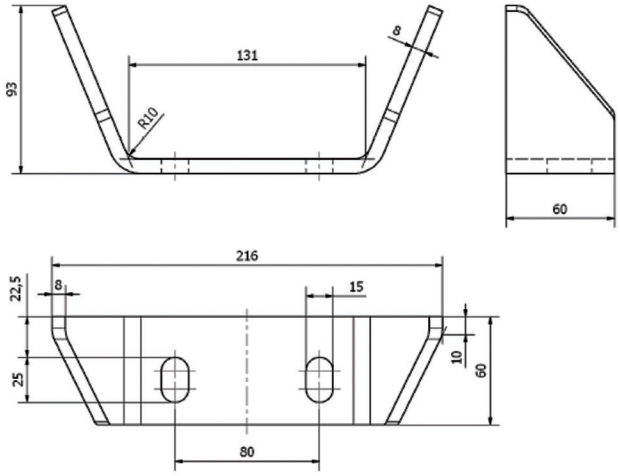

Body mounting bracket

Self colour steel

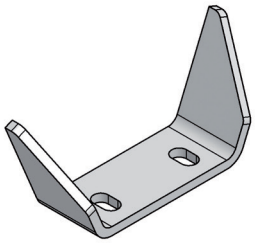

Reference	Weight (kg)
765 024	0,97

Wheel carrier

Carries up to 385/65 R 22,5 tyres with fixing rod
Galvanized steel

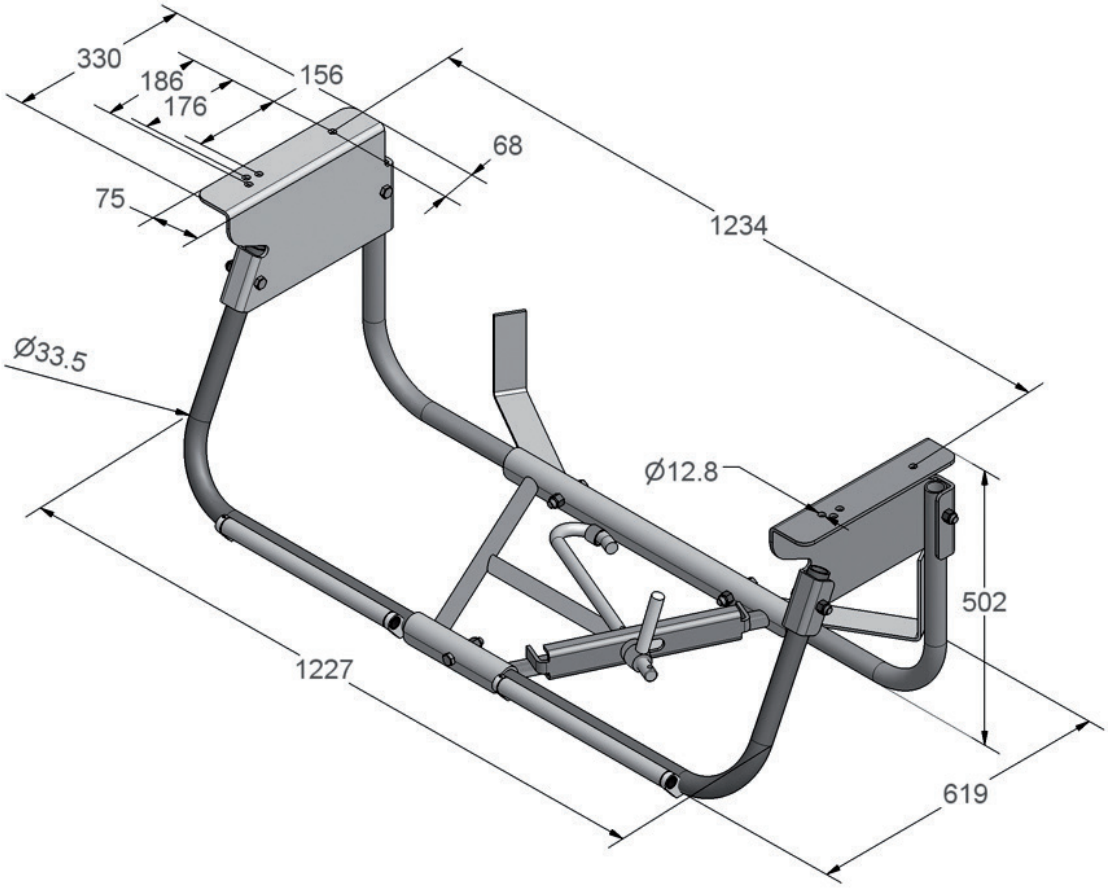

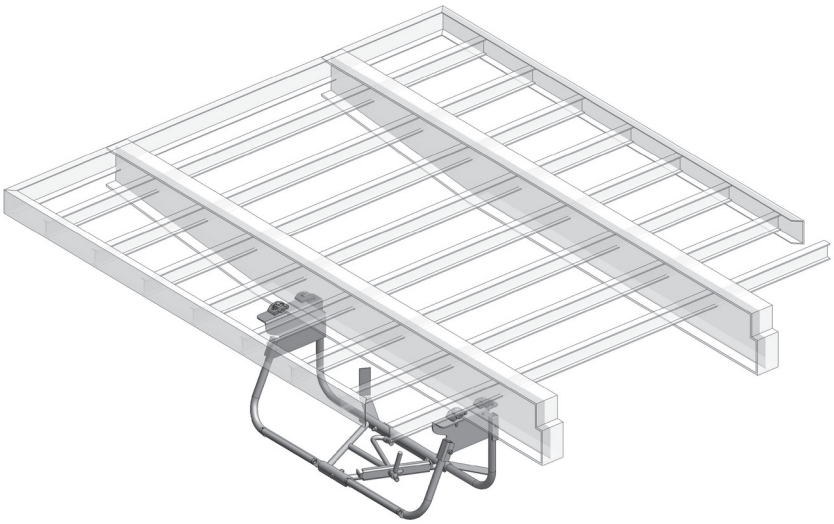

Reference	Weight (kg)
360 050	30

06-12

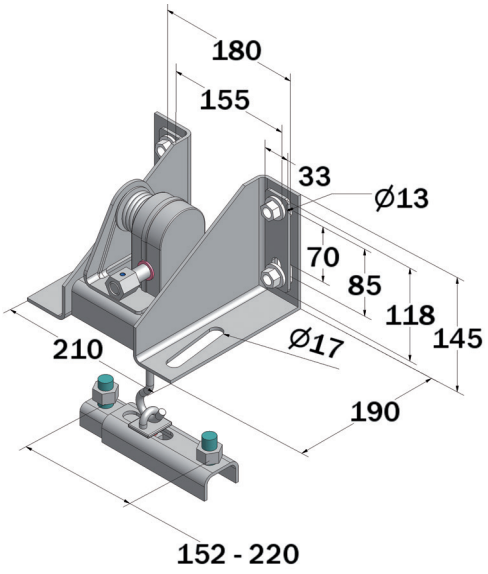

Wheel carrier with winch for light-duty vehicles (3,5t max)

For wheel Center distance ranging from 152 to 220 mm
Cataphorisis steel
Black

Reference	Dimensions (mm)	Weight (kg)
360 135	210 x 190 x 145	5,7

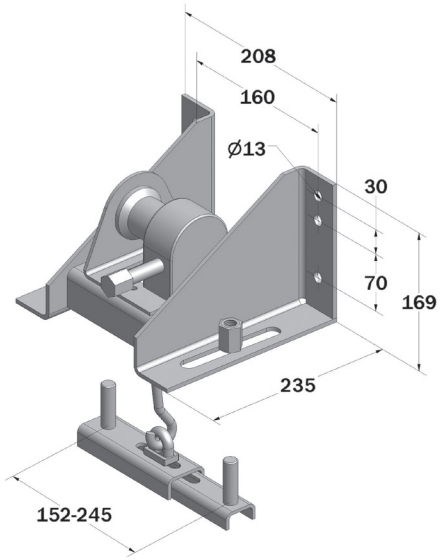

Wheel carrier - for perpendicular assembly

For 6 hole rims, hole centres from 152 to 245 mm.
Delivered without winch

Reference	Dimensions (mm)	Weight (kg)
360 120	250 x 175 x 210	6,4

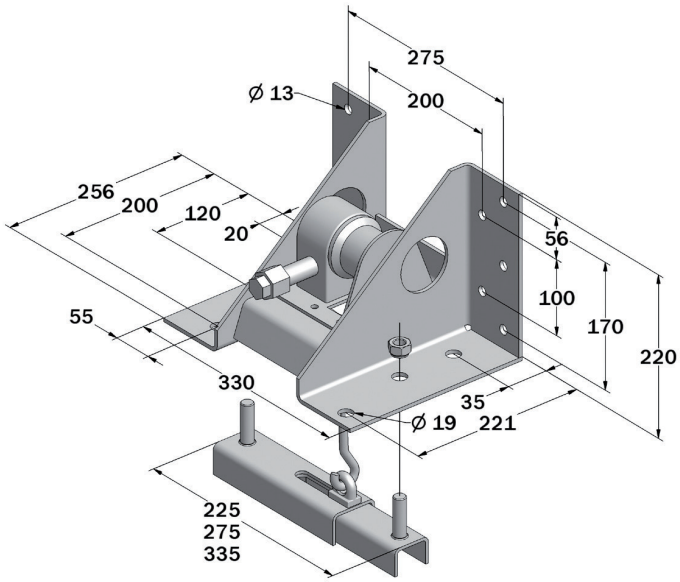

Universal spare wheel carrier

For rims with 8 or 10 holes - 8/225 - 8/275 - 10/335.
Delivered without winch.

Reference	Weight (kg)
360 090	13,5

06-12

Lifting winch (up to 250kg)

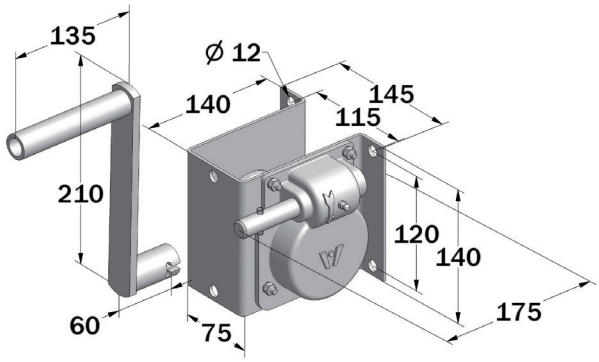

Reference	Weight (kg)
360 080	4,7

Winch for 360120 wheel carrier

25 mm head

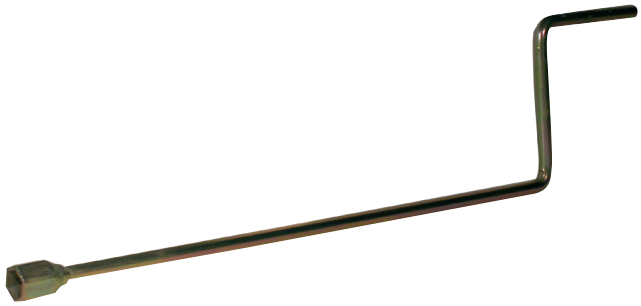

Reference	Weight (kg)
360 130	0,78

Winch for 360090 wheel carrier

25 mm head

Reference	Weight (kg)
360 011	0,81

Wheel chock 1500 kg

Galvanized steel

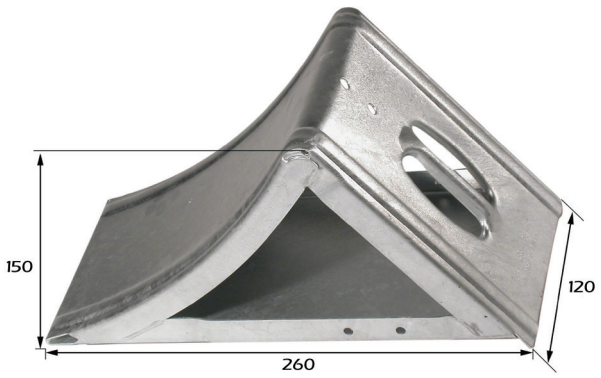

Reference	Weight (kg)
360 140	1

Support for 360140

Galvanized steel

Reference	Weight (kg)
360 141	0,5

Wheel chock 3500 kg

Galvanized steel

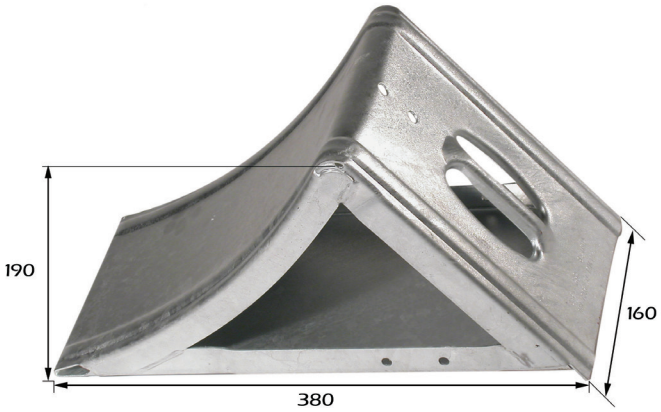

Reference	Weight (kg)
360 150	2,2

Support for 360 150

Galvanized steel

Reference	Weight (kg)
360 151	0,8

WHEEL CHOCK RANGE

APPROVED E53 WHEEL CHOCK

- Ref. 360 171 : without inserts
  Ref. 360 172 : with inserts
  TÜV approved : DIN76051-E53
  For vehicles with more than 7,5 tons capacity

WITH INSERTS → FOR BETTER GRIP ON THE ROAD
WITHOUT INSERTS → FOR DANGEROUS/HAZARDOUS MATERIALS

WHEEL CHOCK E53 SUPPORT

- Ref. 360 162 : for E53 wheel chock
  Galvanized steel body
  Plastic handle

06-12

Wheel chock 6 500 kg

Galvanized steel

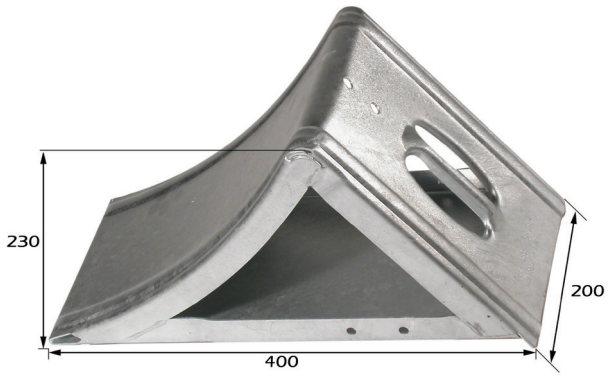

Reference	Weight (kg)
360 160	5

Support for 360 160 and 360 170

Galvanized steel

Reference	Weight (kg)
360 161	1,30

Wheel chock 7 500 kg

Plastic
Yellow

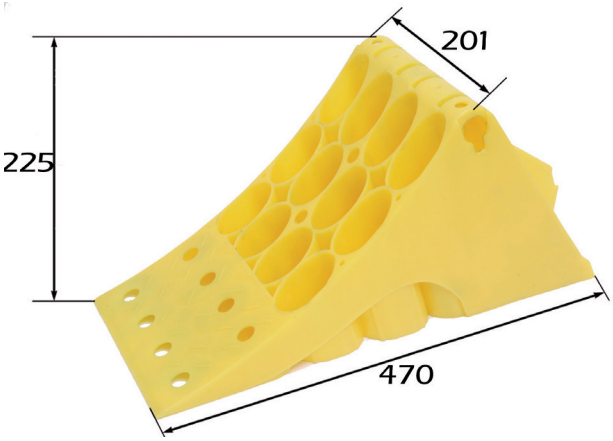

Reference	*Description*	Weight (kg)
360 171	*with zinc plated inserts*	1,70
360 172	*without inserts*	1,55

Support for 360 171 and 360 172

Galvanized steel

Reference	Weight (kg)
360 162	1,30

06-12

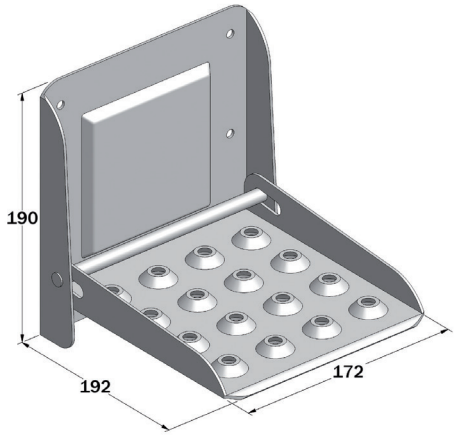

Folding step

Zinc plated steel

Reference	Weight (kg)
112 400	1,46

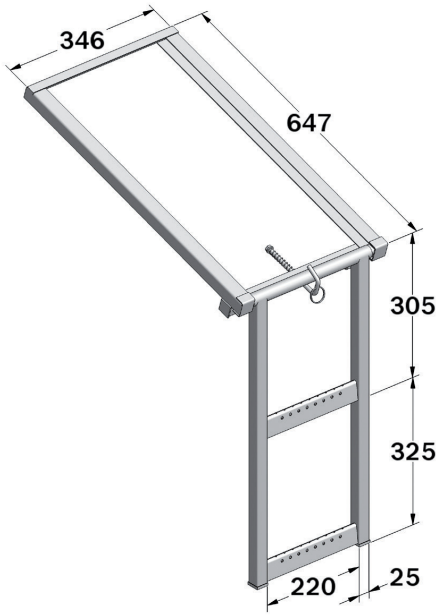

Retractable folding step - 3 steps

Can be locked in folded position with a bolt
Zinc plated steel

Reference	Weight (kg)
112 500	5,5

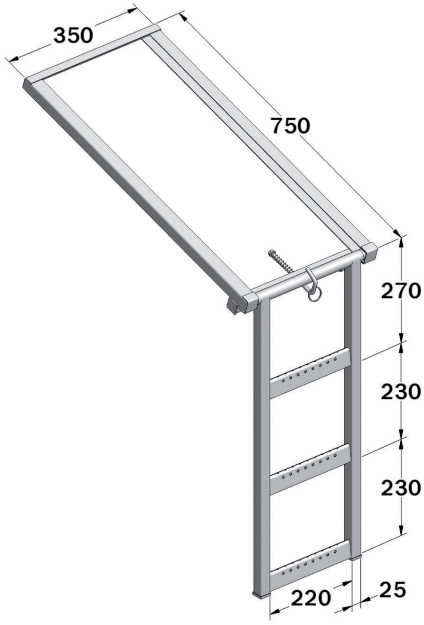

Retractable folding step - 4 steps

Can be locked in folded position with a bolt
Zinc plated steel

Reference	Weight (kg)
112 600	6

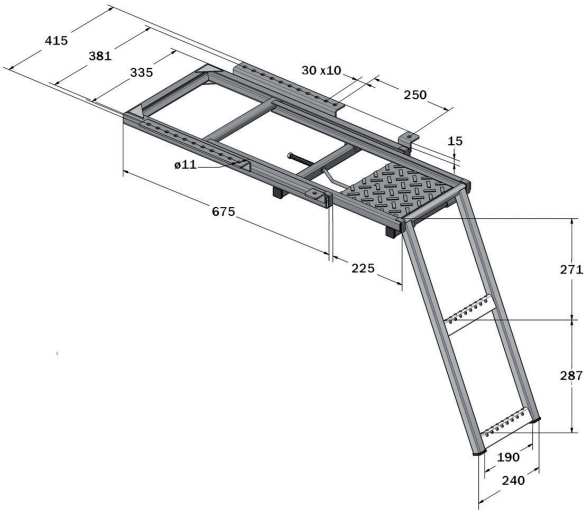

Telescopic folding step - 3 steps

Zinc plated steel

Reference	Weight (kg)
114 500	11,6

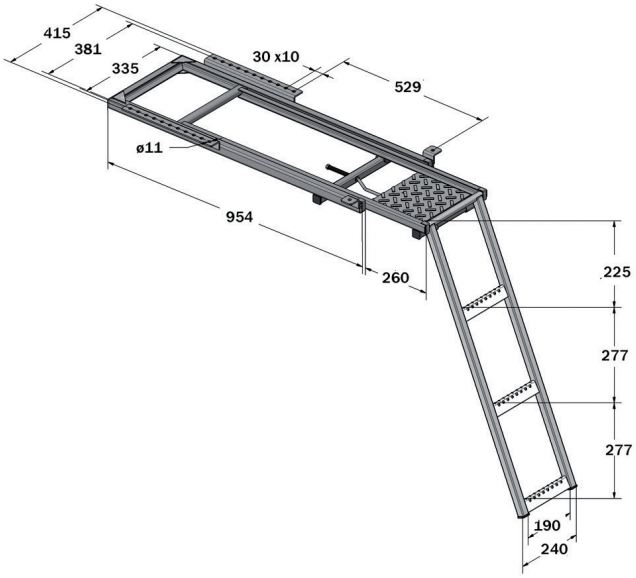

Telescopic folding step - 4 steps

Zinc plated steel

Reference	Weight (kg)
114 600	14,3

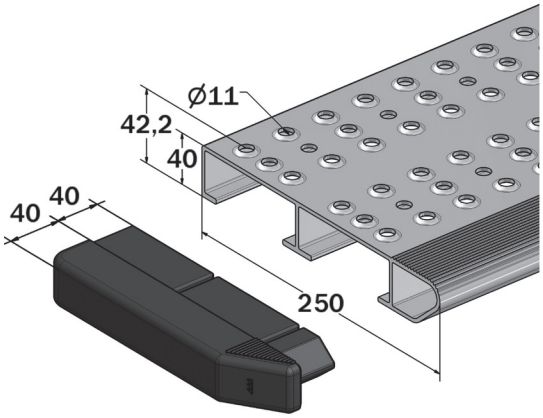

Step profile

Anodized aluminium

Reference	Description	Width (mm)	*Weight (kg)*
474 656 2420		4200	23,69
280 390	Rubber end cap		

06-12

Pull out folding steps

45° opening.
Width : 625 mm.
From 3 to 7 steps - anti-slip surface
Galvanized steel

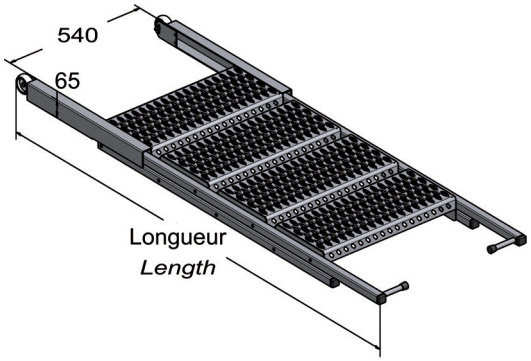

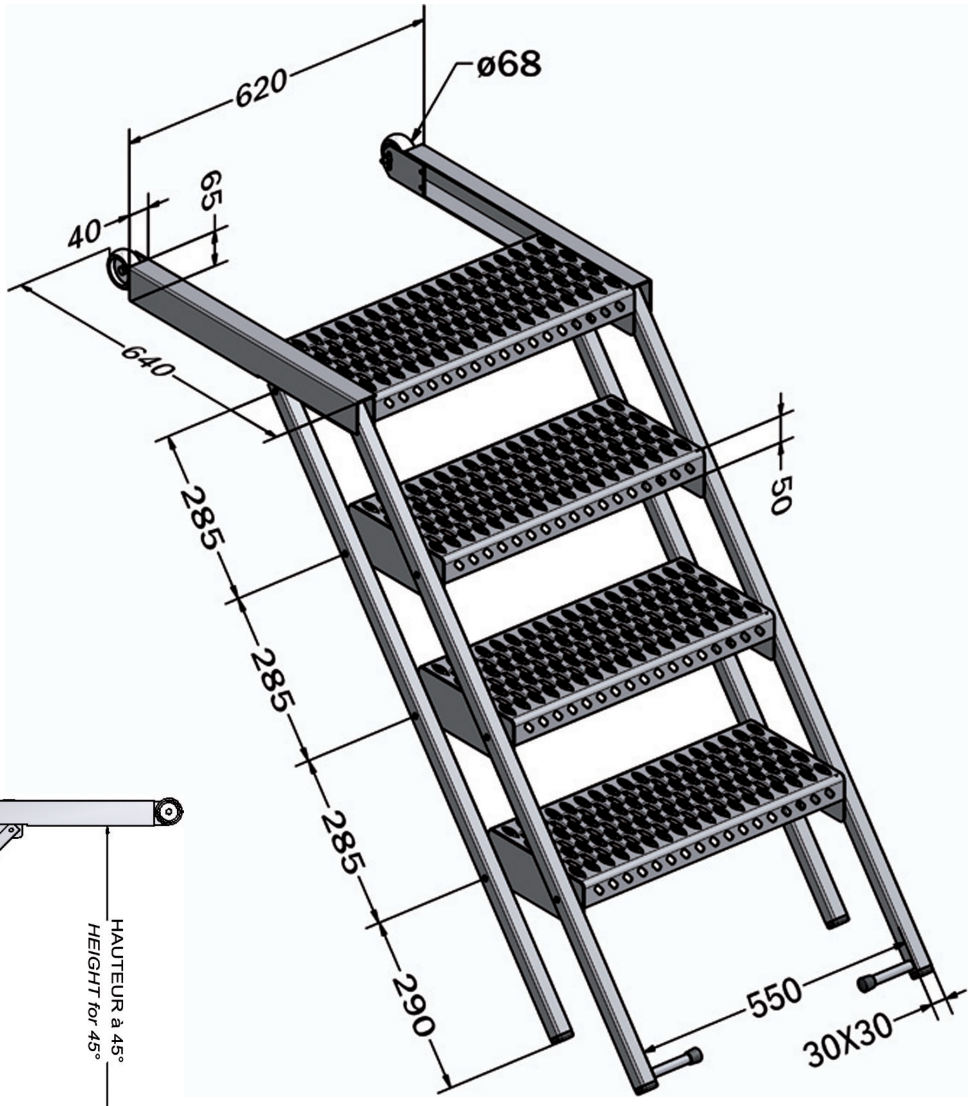

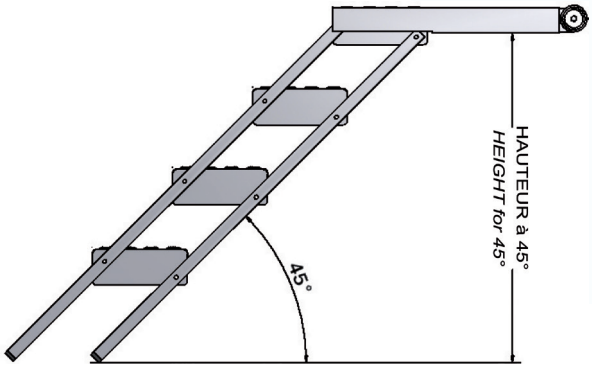

Reference	Steps	Length (mm)	height (mm)	Weight (kg)
3 080 004	3	1460	630	24
3 080 008	4	1740	810	29
3 080 013	5	2020	990	35
3 080 015	6	2310	1220	42
3 080 016	7	2600	1410	49

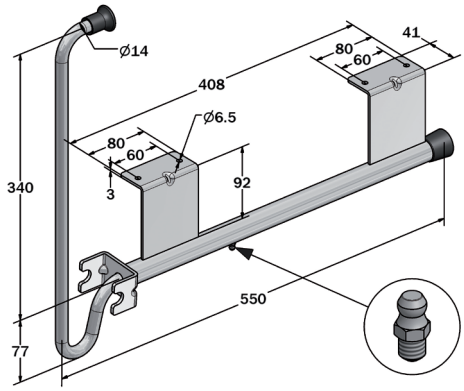

Door hold back with grease nipple

Zinc plated handle - bichromated body

Reference	Weight (kg)
66 421	2,5

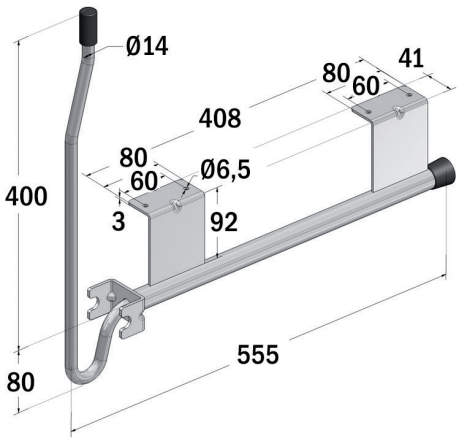

Door holdback with grease nipple

Reference	*Material*	Weight (kg)
66 422	*Zinc plated handle, bichromated body*	2,5
66 450	*Stainless steel*	2,5

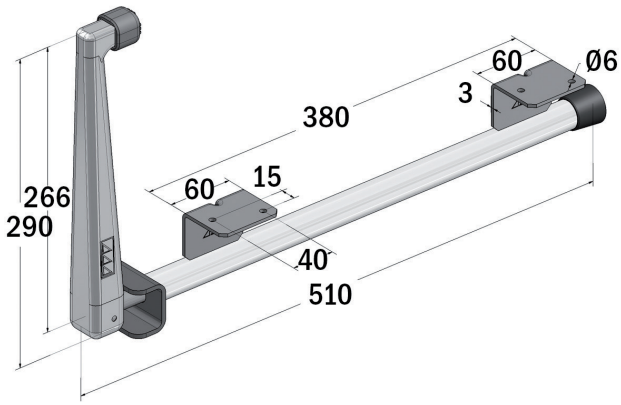

Door holdback with aluminium handle

Anchorage length : 380 mm
Stainless steel

Reference	Weight (kg)
66 455	2,1

06-12

Door holdback with plastic handle

Anchorage length : 380 mm

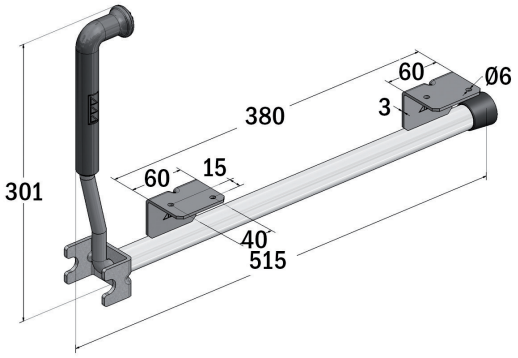

Reference	Material	Weight (kg)
66 465	*Stainless steel*	1,98
66 466	*Zinc plated steel*	1,98

Internal door holdback

Left and right
Zinc plated steel

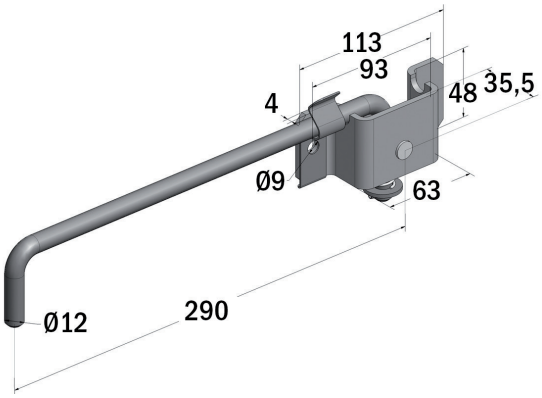

Reference	Weight (kg)
66 520	0,67

Door holdback hook

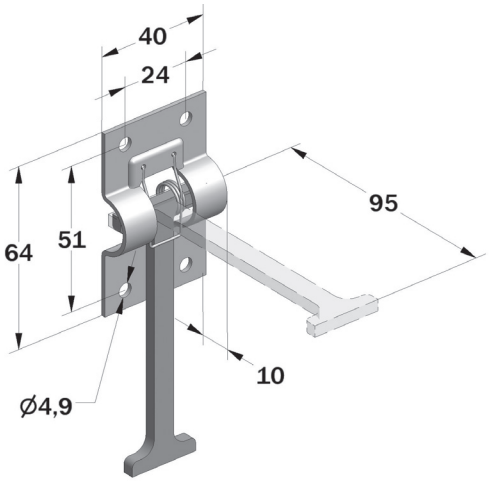

Reference	Material	Weight (kg)
66 630	Zinc plated steel	0,06
66 631	Stainless steel	0,06

Door holdback bracket

Suitable for hook 66 630 or 66 631

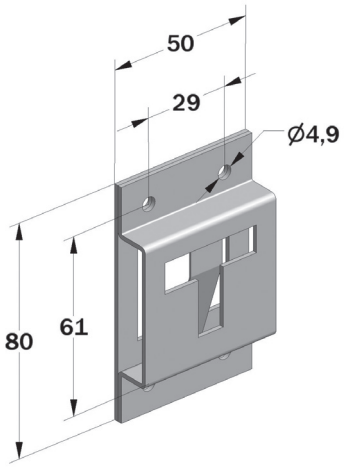

Reference	Material	Weight (kg)
66 620	Zinc plated steel	0,03
66 621	Stainless steel	0,03

Plastic protection for hook

For 66 630 and 66 631

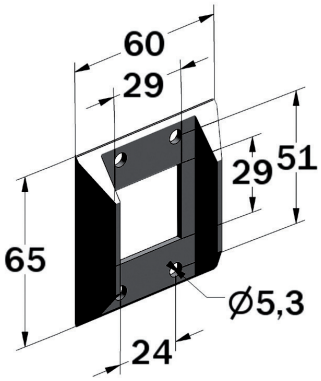

Reference	Weight (kg)
66 640	0,01

Plastic protection for bracket

For 66 620 and 66 621

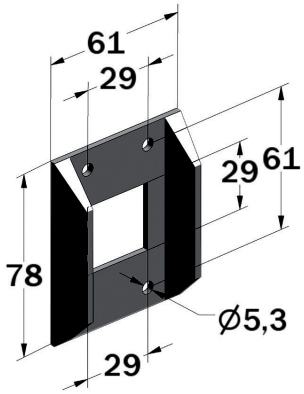

Reference	Weight (kg)
66 641	0,01

Door holdback hook

Stainless steel

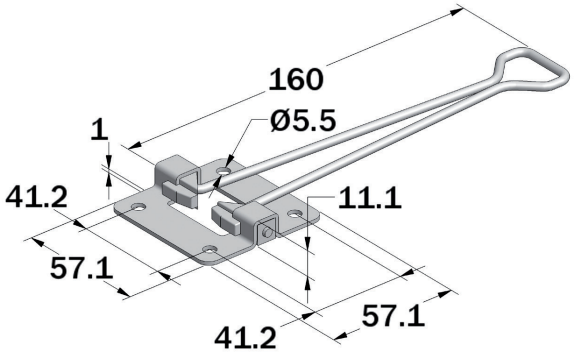

Reference	Length (mm)	Weight (kg)
66 651	160	0,07

Door holdback hook

Stainless steel

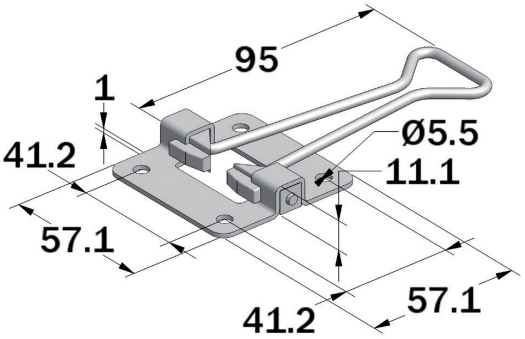

Reference	Length (mm)	Weight (kg)
66 661	95	0,06

Flush mounted door holdback bracket

Stainless steel

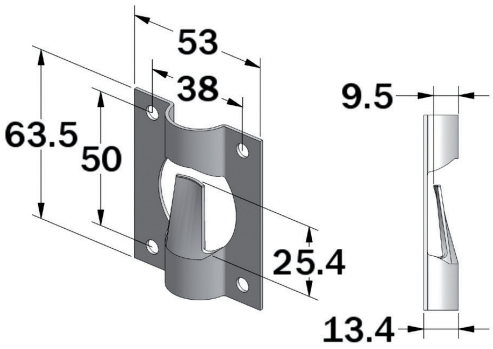

Reference	Weight (kg)
66 681	0,04

Recessed door holdback bracket

Stainless steel

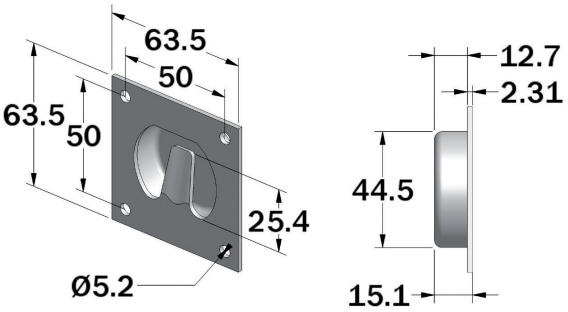

Reference	Weight (kg)
66 671	0,06

Door holdback with spring

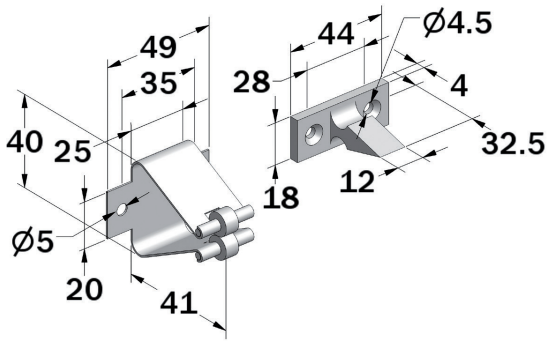

Reference	Weight (kg)
52 600	0,04

Rubber door holdback

Blue male part in nylon, flexible part in flexible rubber Shore A40+

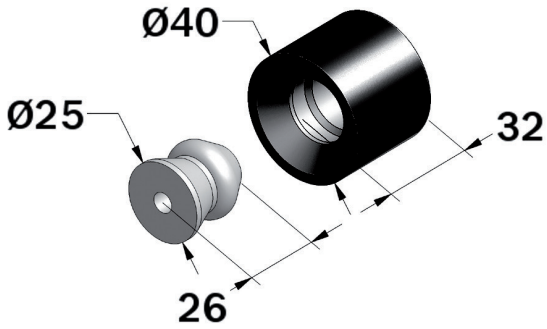

Reference	Weight (kg)
53 500	0,05

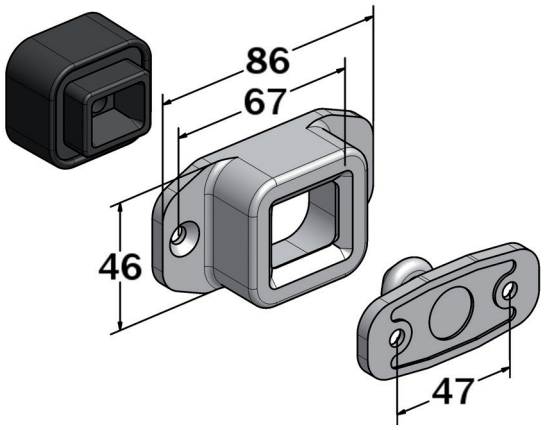

Complete door holdback

Mode of an aluminium bracket and nose, and a rubber buffer.

Reference	*Length of the nose mm*	Weight (kg)
53 313	*30*	0,14
53 314	*40*	0,14
53 315	*50*	0,15
53 316	*60*	0,15

Rubber insert only

Reference	*Description*	Weight (kg)
53 320	*For 53 313, 53 314, 53 315 and 53 316*	0,03

06-12

◢Bumper (A)
Self colour aluminium

◢Plastic cap (B)
Left or right

◢Plastic cover (C)

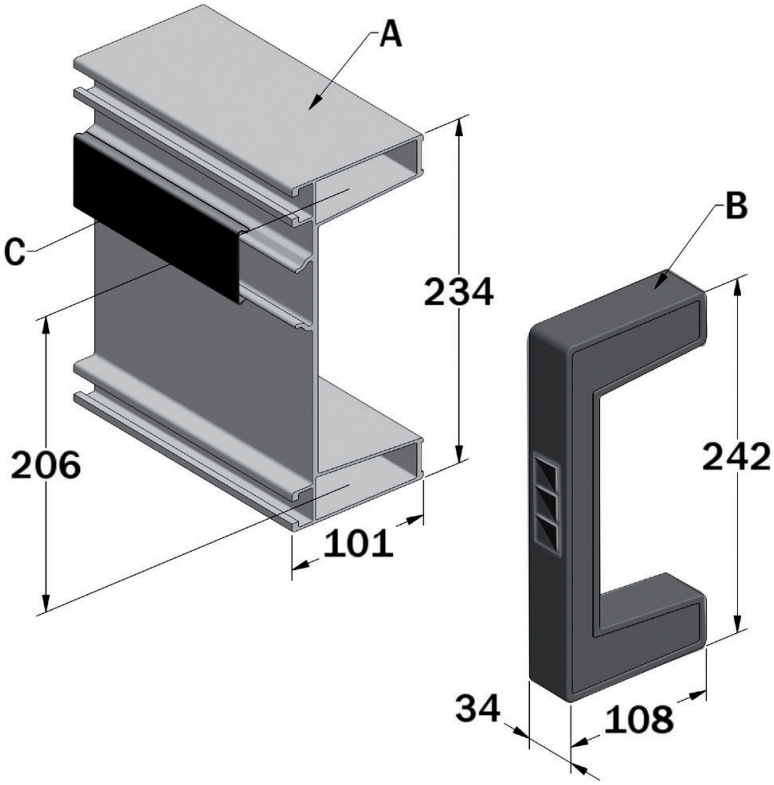

Reference	Length (mm)	Weight (kg)
75 000	2400	15

Reference	Weight (kg)
75 002	0,16

Reference	Length (mm)	Weight (kg)
75 003	150	0,02

06-12

Steel bumper

Delivered with caps.
Grey

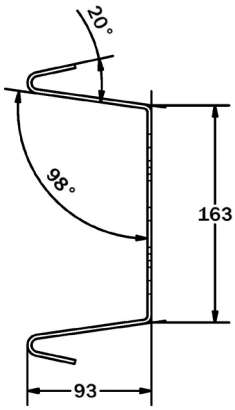

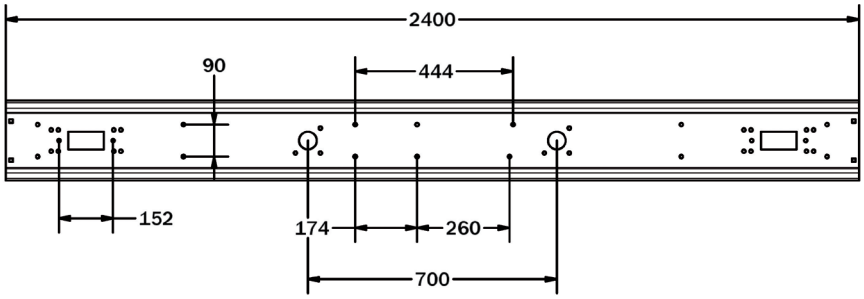

Reference	Length (mm)	Weight (kg)
75 001	2400	15,7

Docking buffer with bolts

Bolt-on

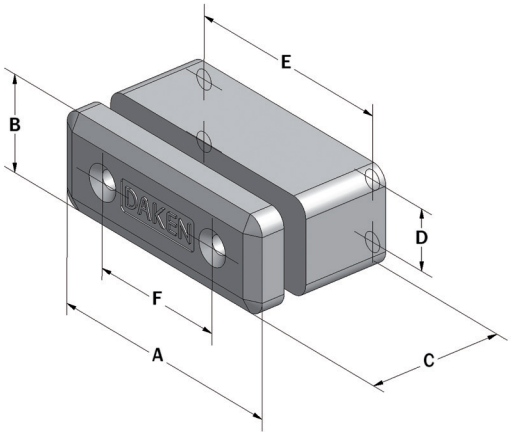

Reference	a (mm)	b (mm)	c (mm)	d (mm)	e (mm)	f (mm)	Weight (kg)
204 900	160	60	90	38	138	90	1,93
204 910	180	80	106	54	154	103	3
204 920	200	100	123	74	174	113	4,3

Docking buffer with plates

Weld-on

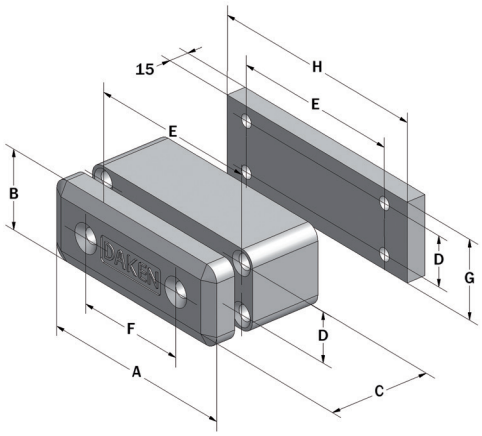

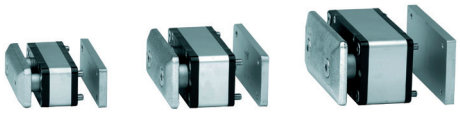

Reference	a (mm)	b (mm)	c (mm)	d (mm)	e (mm)	f (mm)	g (mm)	H (mm)	Weight (kg)
204 950	180	60	105	90	60	180	160	60	2,85
204 960	200	80	115	54	154	103	80	200	4,4
204 970	220	100	135	74	174	113	100	220	6,9

Buffer
EPDM

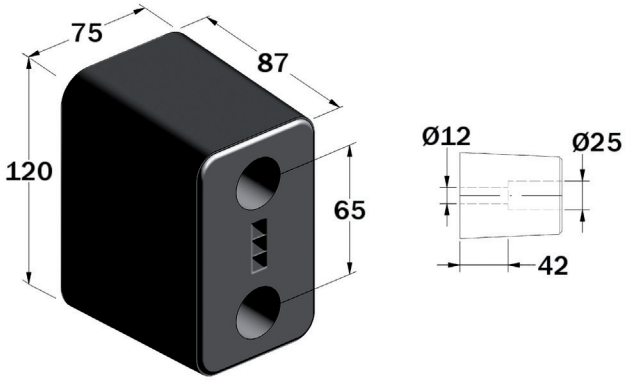

Reference	Dimensions (mm)	Weight (kg)
204 800	120 x 75	0,61

Buffer
EPDM

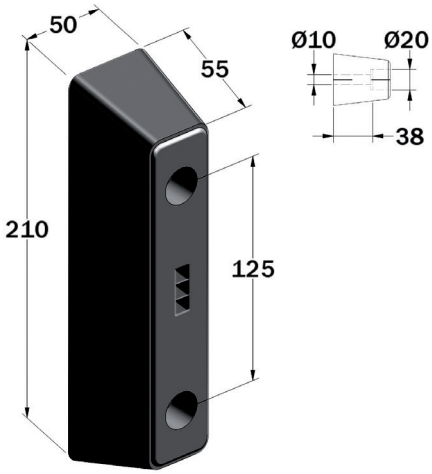

Reference	Dimensions (mm)	Weight (kg)
204 600	210 x 50	0,55

Buffer
EPDM

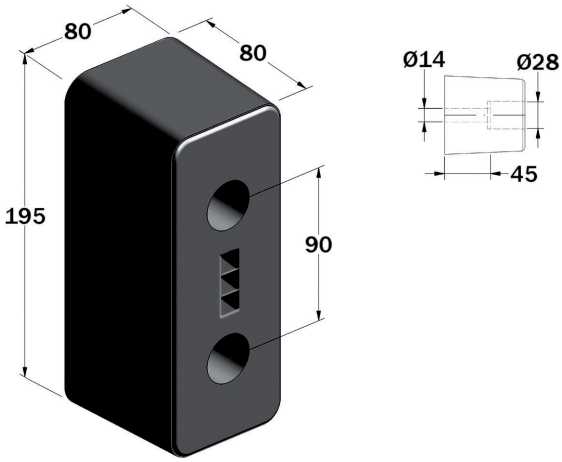

Reference	Dimensions (mm)	Weight (kg)
204 700	195 x 80	1,11

Buffer
EPDM

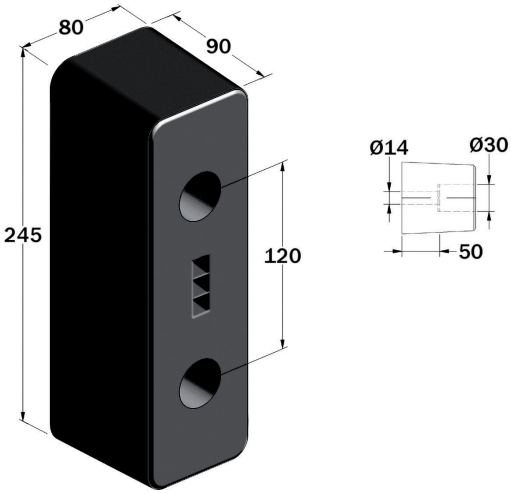

Reference	Dimensions (mm)	Weight (kg)
204 500	245 x 80	1,15

Buffer

Rubber

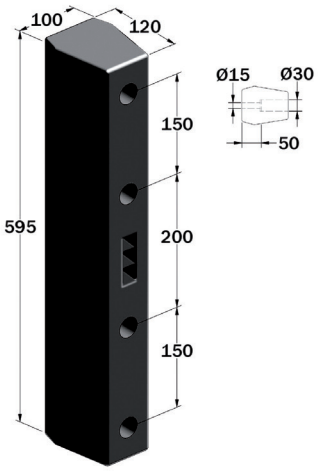

Reference	Dimensions (mm)	Weight (kg)
204 200	595 x 100	6,2

Buffer

EPDM

Marking available on central strip - minimum order : 500 pieces.

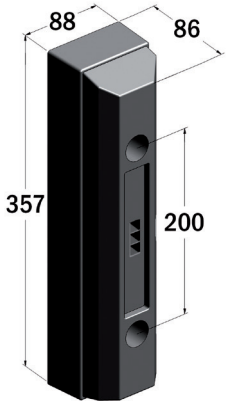

Reference	Dimensions (mm)	Weight (kg)
204 350	357 x 88	3

Buffer

EPDM

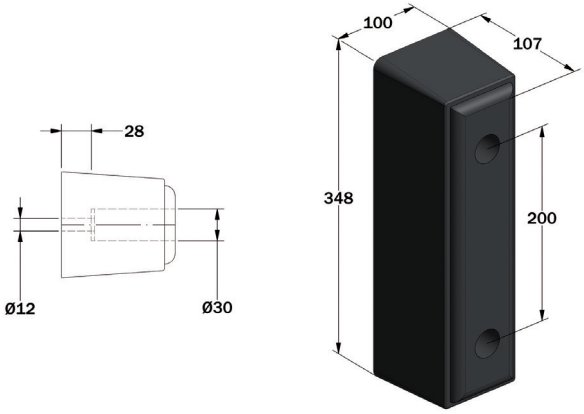

Reference	Dimensions (mm)	Weight (kg)
204 300	358 x 100	3

Buffer

EPDM

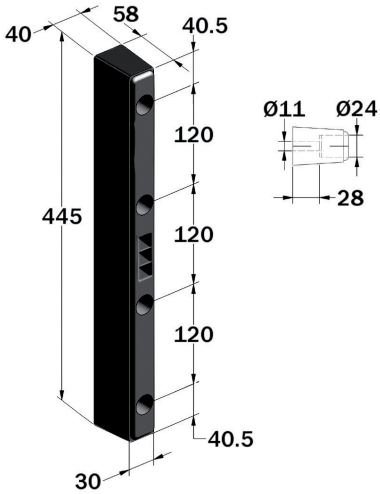

Reference	Dimensions (mm)	Weight (kg)
204 400	445 x 40	1,25

◢BOYRIBUMPER buffer

2 or 4 rolls
Steel support

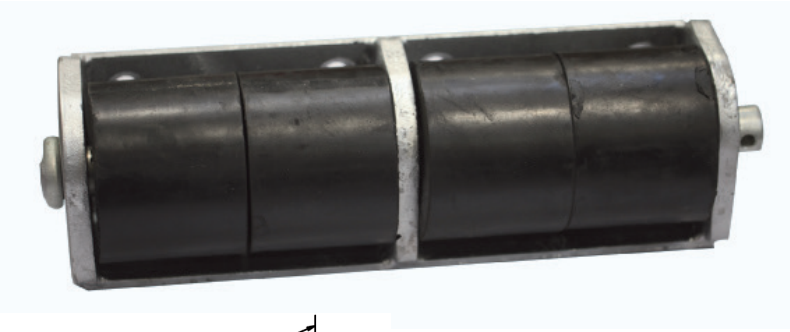

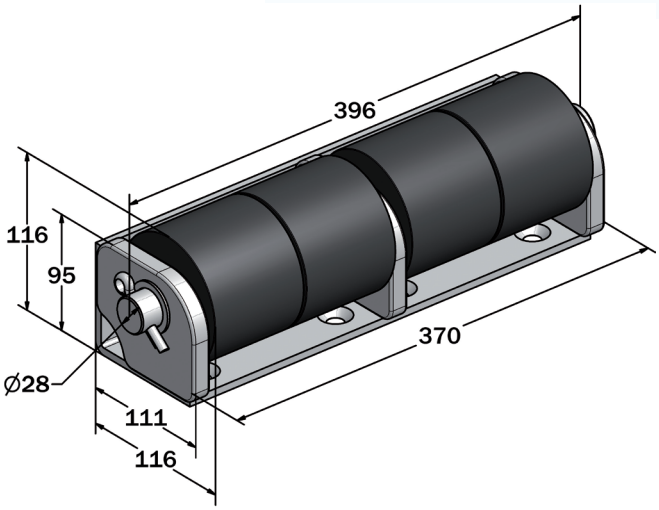

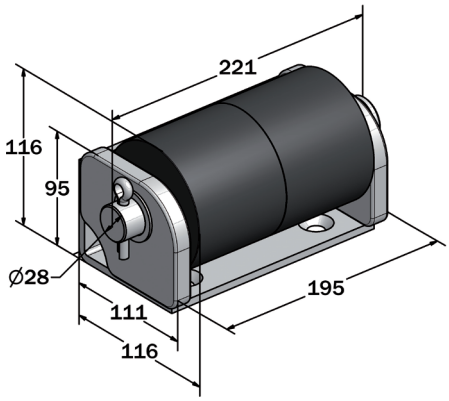

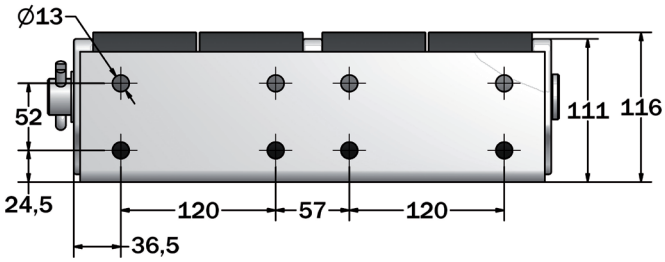

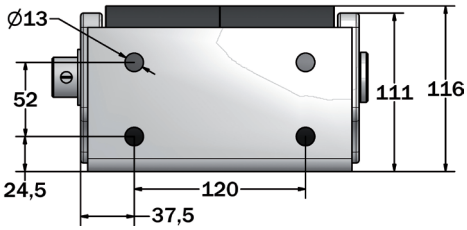

Reference	Rolls	Weight (kg)
714 751	2	6,4
714 651	4	11,6

◢BOYRIBUMPER buffer wheel only

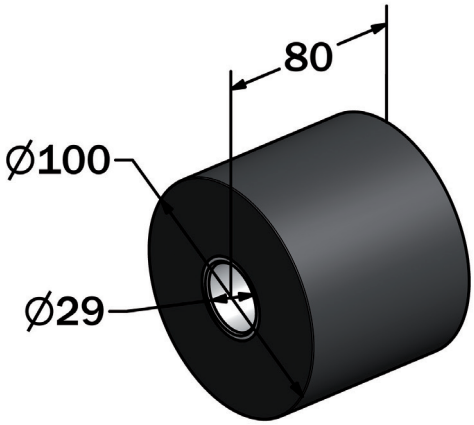

Reference	Rolls	Weight (kg)
715 140	1	0,96

Corner buffer

Zinc plated steel

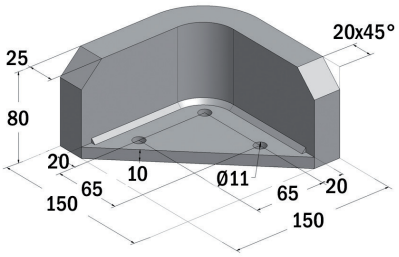

Reference	Weight (kg)
204 050	4,6

Steel buffer

Fixing Ø M16
Galvanized steel

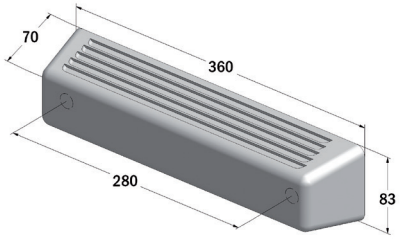

Reference	Weight (kg)
204 010	5,1

Buffer

EPDM

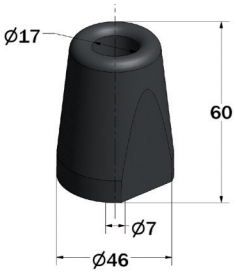

Reference	Weight (kg)
204 100	0,08

Buffer

EPDM

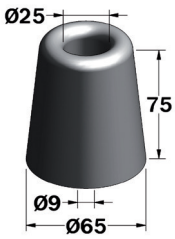

Reference	Weight (kg)
204 110	0,22

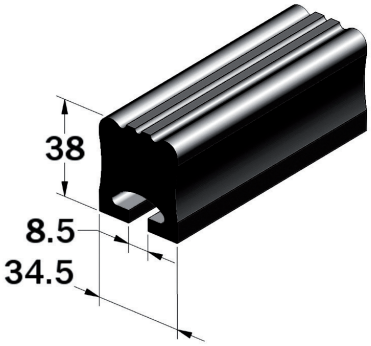

Buffer profile

For dropside protection
Rigid PVC

Reference	Length (mm)	Weight (kg)
208 711	5000	6,08

06-12

Delta buffer H40

EPDM
Black

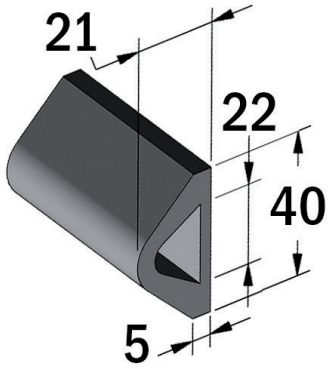

Reference	Coil m	Weight (kg)
208 700	20	12

Delta buffer H60

EPDM
Black

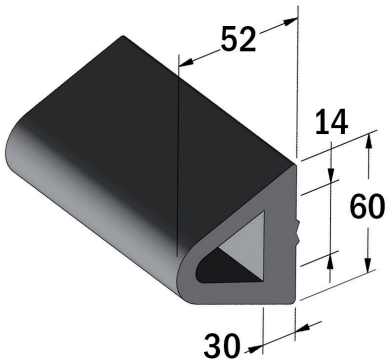

Reference	Length (mm)	Weight (kg)
208 600	2500	5,35

Delta buffer H80

EPDM
Black

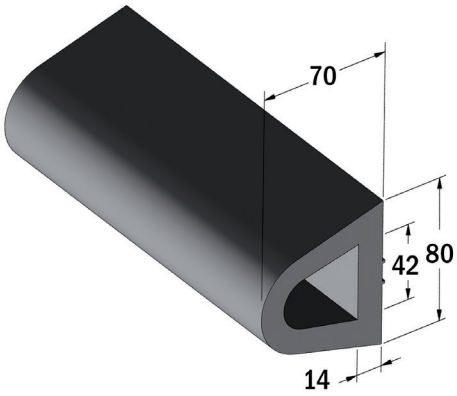

Reference	Length (mm)	Weight (kg)
208 400	2500	8,4

Delta buffer H110

EPDM
Black

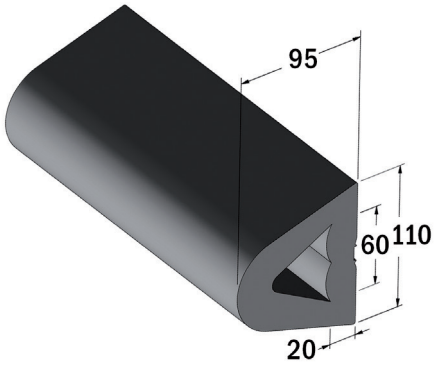

Reference	Length (mm)	Weight (kg)
208 300	2500	19

06-12

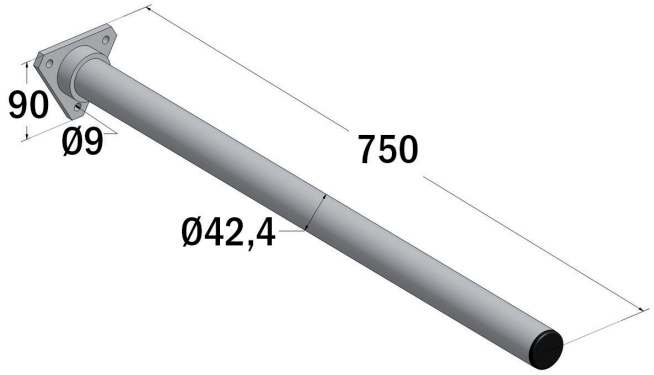

Straight tube

Complete with PVC cap
Galvanized steel

Reference	Weight (kg)
230 000	2,7

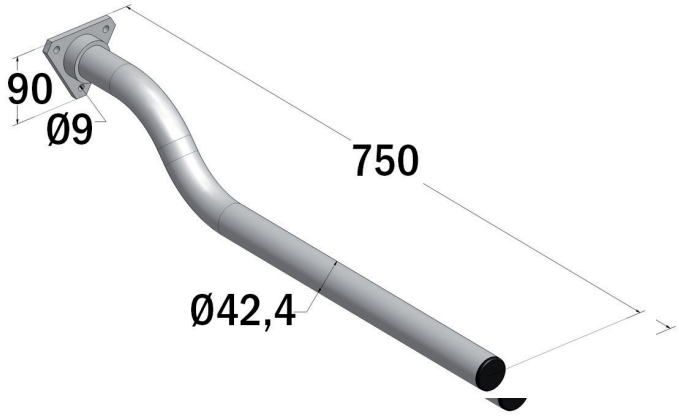

Cranked tube

Complet with PVC cap
Galvanized steel

Reference	Weight (kg)
230 001	2,8

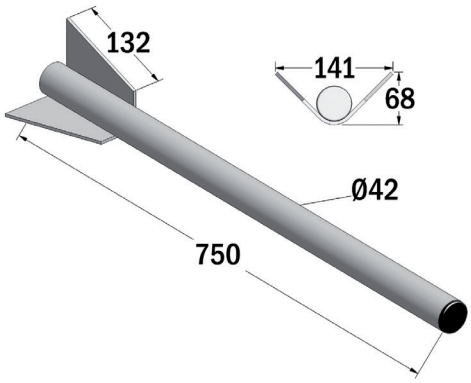

Weld-on tube

Complete with PVC cap
Zinc plated steel

Reference	Weight (kg)
230 004	2,63

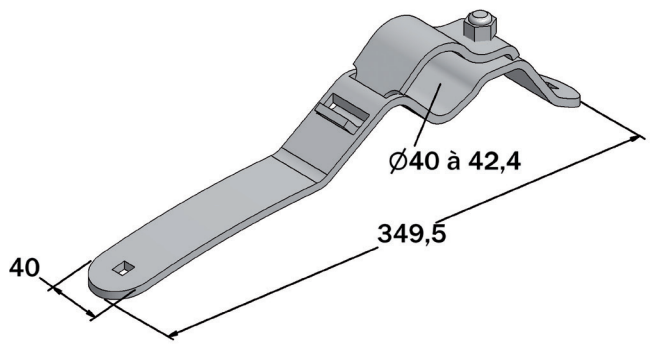

Mudguard support

Zinc plated steel

Reference	Weight (kg)
230 005	0,73

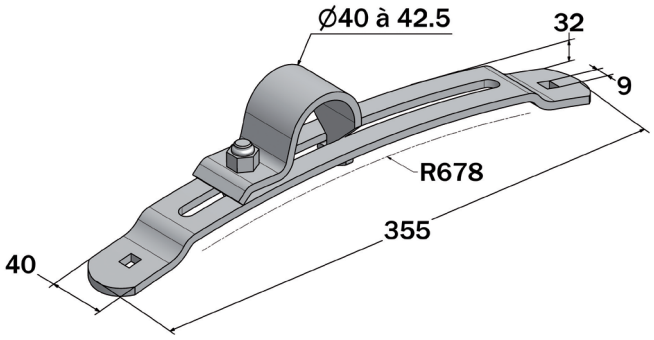

Adjustable mudguard support

Zinc plated steel

Reference	Weight (kg)
230 002	0,65

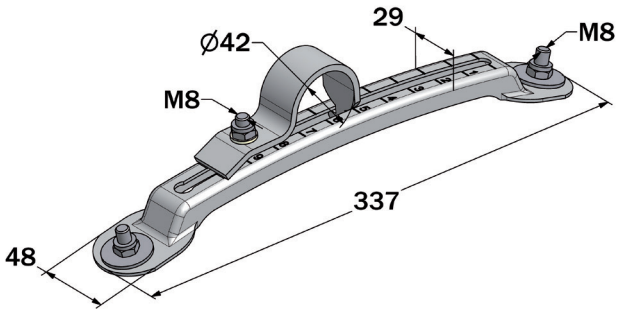

Adjustable mudguard support

Dacromet

Reference	Weight (kg)
230 006	0,65

06-12

Parking brake with adjustable handle

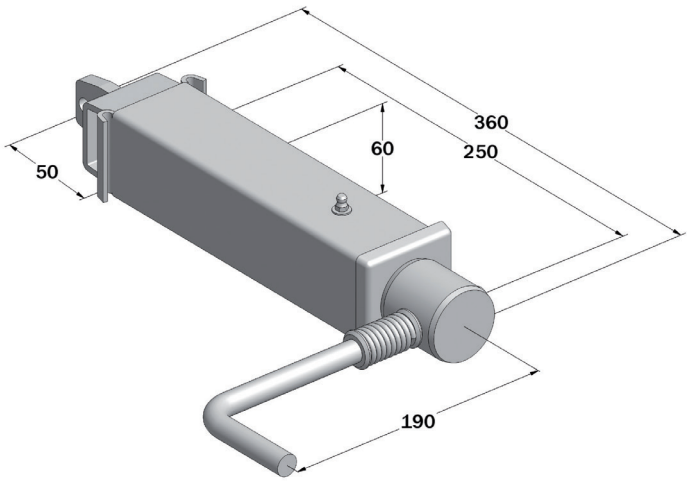

Reference	Weight (kg)
207 100	3,6

Pulley with bracket

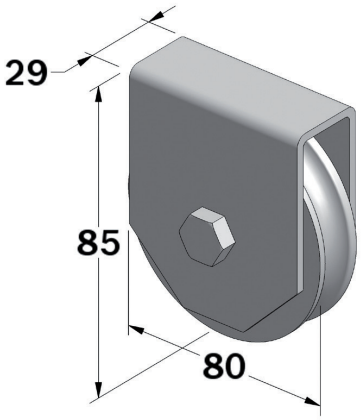

Reference	Weight (kg)
207 110	0,37

Prop wheel

Flat tyre

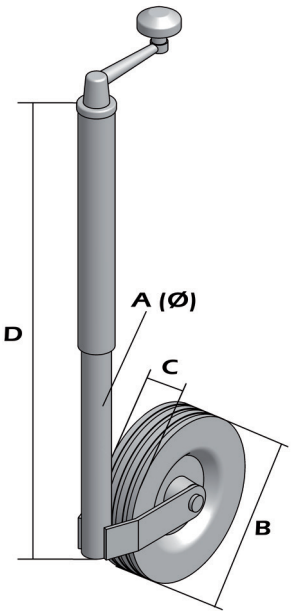

Reference	a (mm)	b (mm)	c (mm)	d (mm)
360 400	35	160	40	470
360 500	42	200	50	510
360 600	48	190	50	500

Mounting clamp

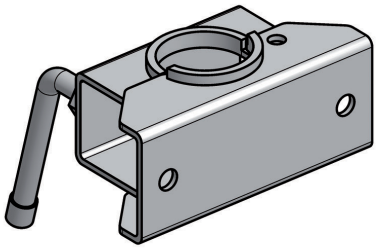

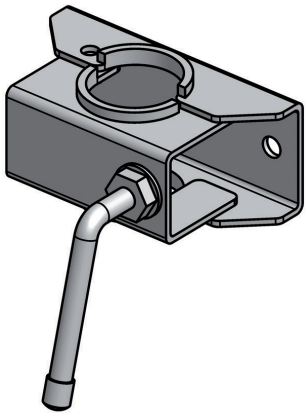

Reference	*Description*
360 450	*For prop wheel 360 400*
360 550	*For prop wheel 360 500*
360 650	*For prop wheel 360 600*